20FT SUBSEA BASKET

PAYLOAD 8000 KG
W/REMOVABLE WALLS
ISO CORNERS

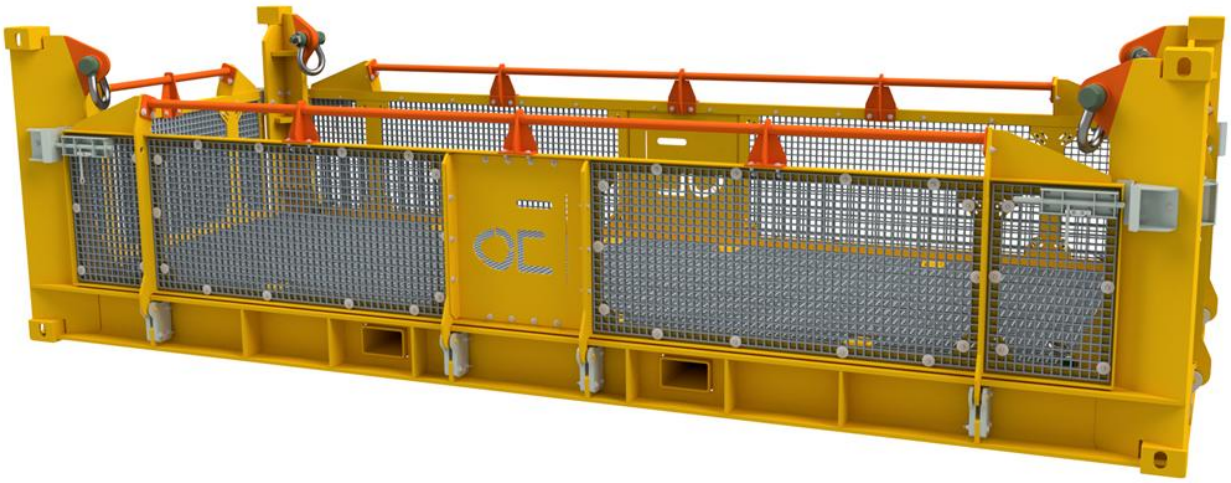

Description

The 20 ft Subsea Basket is a durable offshore unit designed for safe transport and handling of equipment in subsea environments. It features ISO corner fittings for compatibility with standard lifting and transport systems.

The basket is equipped with removable walls on all sides, allowing full access and flexible loading from any direction. Each side can be opened independently and secured using a slide bolt locking system.
Four lifting padeyes are integrated into the structure to ensure safe and balanced lifting operations. The design provides strength, accessibility, and operational efficiency for offshore use.

Typical Operations

- Tooling Operations
- Subsea Storage Operations
- Intervention Operations

Features

- ISO corner fittings
- Removable walls on all sides
- Slide bolt locking system
- 2x 2-Part Wiresling
- ROV grabber bar on all sides
- 8000 kg Payload

The specification details are illustrative for marketing purpose only. Actual equipment may be different as a result of product improvement or other reasons. Specific interface and performance information should be reconfirmed at time of order placement.
Envirent AS, Robotvegen 16, 4340 Bryne, +47 477 77 500, sales@envirent.no

envirent

SPECIFICATIONS

20FT SUBSEA BASKET

Document No.: EVT-14442

Revision: 0

General Technical Specifications

Type	20 Ft Subsea Basket
Part Number	BASKET-SUB-20FT
Outside Dimensions L x W x H	6179 mm x 2535 mm x 1730 mm
Depth Rating	3000 MSW
MGW	13 000 kg
Tare	5000 kg
Payload	8000 kg

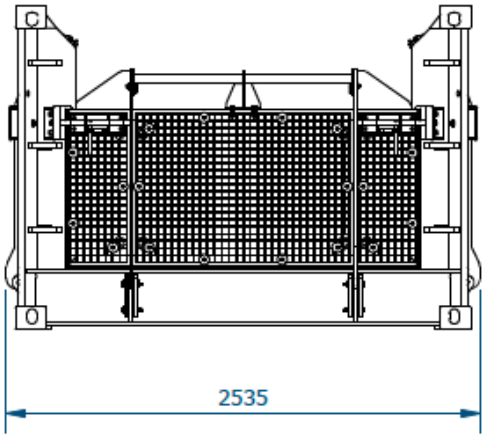

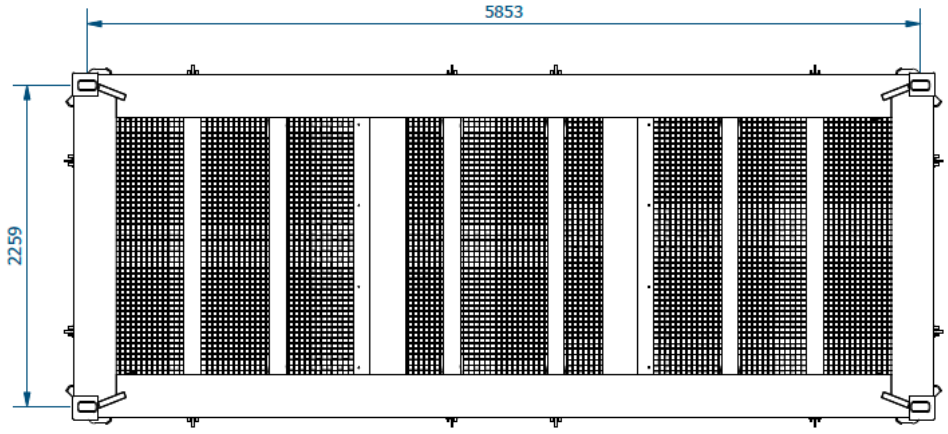

VIEW3
(1 : 40)

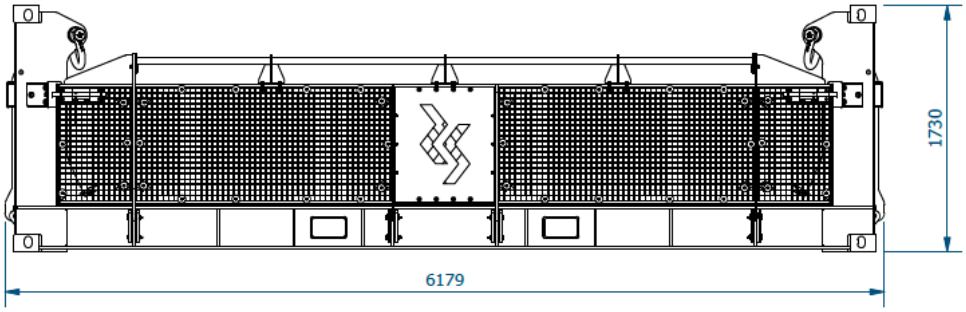

The specification details are illustrative for marketing purpose only. Actual equipment may be different as a result of product improvement or other reasons. Specific interface and performance information should be reconfirmed at time of order placement.
Envirent AS, Robotvegen 16, 4340 Bryne, +47 477 77 500, sales@envirent.no

envirent